REVISION				
ZONE	REV	DESCRIPTION	DATE	APPROVED
	—	INITIAL RELEASE	071017	—

NOTES: UNLESS OTHERWISE SPECIFIED

1. INTERPRET DRAWING IAW THE GLOBAL PROFESSIONAL PUBLICATIONS "DRAWING REQUIREMENTS MANUAL", EIGHTH EDITION.
2. INTERPRET DIMENSIONS AND TOLERANCES IAW ANSI Y14.5M – 1982.
3. INTERPRET ABBREVIATIONS IAW MIL-STD-12.
4. WARNING: WATER FITTINGS HAVE A CLEAR ID OF .375 INCHES. USING A SLEEVE OR SIMILAR DEVICE INSIDE THE WATER HOSE MAY CAUSE FLUID RESTRICTIONS AND INTERFERENCE WITH THE NORMAL OPERATION OF THE CATHODE AND THEREFORE IS NOT RECOMMENDED.
5. WATER CHANNELS ARE SYMMETRICAL THROUGHOUT, ORIENTATION OF WATER INLET OR OUTLET IS NOT CRITICAL.
6. WARNING: MINIMUM HOSE LENGTH OF 60" IS REQUIRED TO ENSURE RESISTIVITY RELATIVE TO ELECTRICAL GROUND WITHIN 50 KILO OHMS. TEST CABLE WITH AN OHM METER OR OTHER SUITABLE DEVICE BEFORE USE.
7. MULTI-CONTACT-USA:
   5560 SKYLANE BLVD.
   SANTA ROSA, CA 95403
   VOICE: (707) 575-7575
   FAX: (707) 575-7373
   INTERNET:
   www.multi-contact-usa.com
8. FOR PROPER INSTALLATION, OPERATION, AND USE OF THE SUNSOURCE PLANAR MAGNETRON CATHODE(S), SEE MATERIALS SCIENCE, INC. DOCUMENT NUMBER 251091.
9. P/N 88040-08 IS AVAILABLE FROM:
   ALPHA TECHNOLOGIES
   320 PREMIER COURT, SUITE 222
   FRANKLIN, TN 37067
   TEL: (615) 771-6650
   HTTP://WWW.ALPHAFITTINGS.COM
10. ALL FASTENERS ARE METRIC.
11. TO ENSURE A SUCCESSFUL INSTALLATION: NOT ALL MRC SYSTEMS ARE CONSTRUCTED THE SAME. BE SURE TO VERIFY THE DESIRED SOURCE TO SUBSTRATE DISTANCE (NOTED AS .81 WITH 1/2" THICK TARGET ASSEMBLY. THIS DISTANCE IS CONTROLLED BY VARYING THE MOUNTING FLANGE THICKNESS TO ACCOMODATE WALL THICKNESS VARIATIONS. THINNER TARGET ASSEMBLIES WILL REDUCE THE OVERALL INSERTION DEPTH EXACTLY.
12. THE CHAMBER WALL MOUNTED ANODE/GROUND SHIELD ASSY IS NOT INCLUDED. ANODE/GROUND SHIELD ASSEMBLIES CAN BE SUPPLIED SEPARATELY TO MAINTAIN THE DESIRED DARK SPACE REGION SURROUNDING THE CATHODE. CONSULT FACTORY FOR ASSISTANCE.

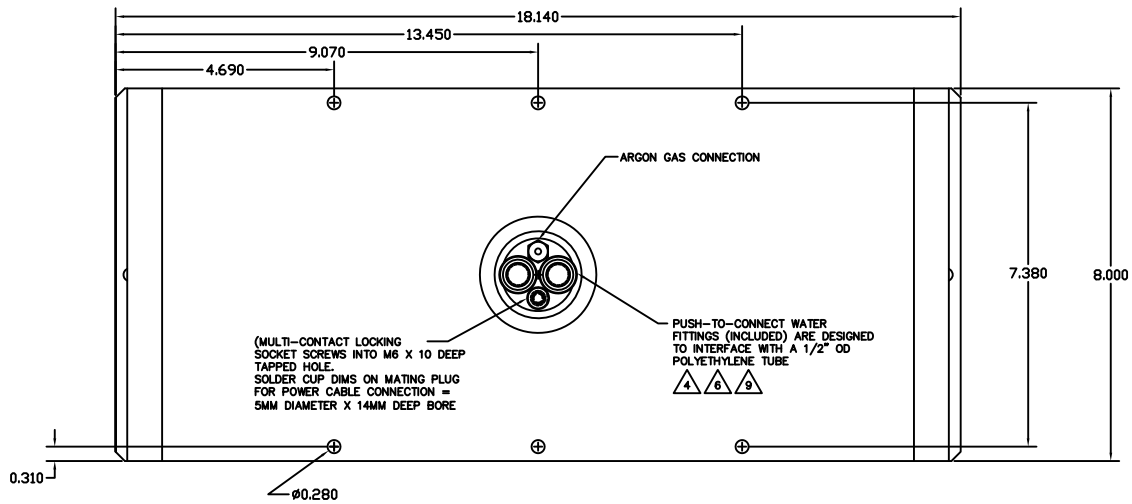

ATMOSPHERE SIDE

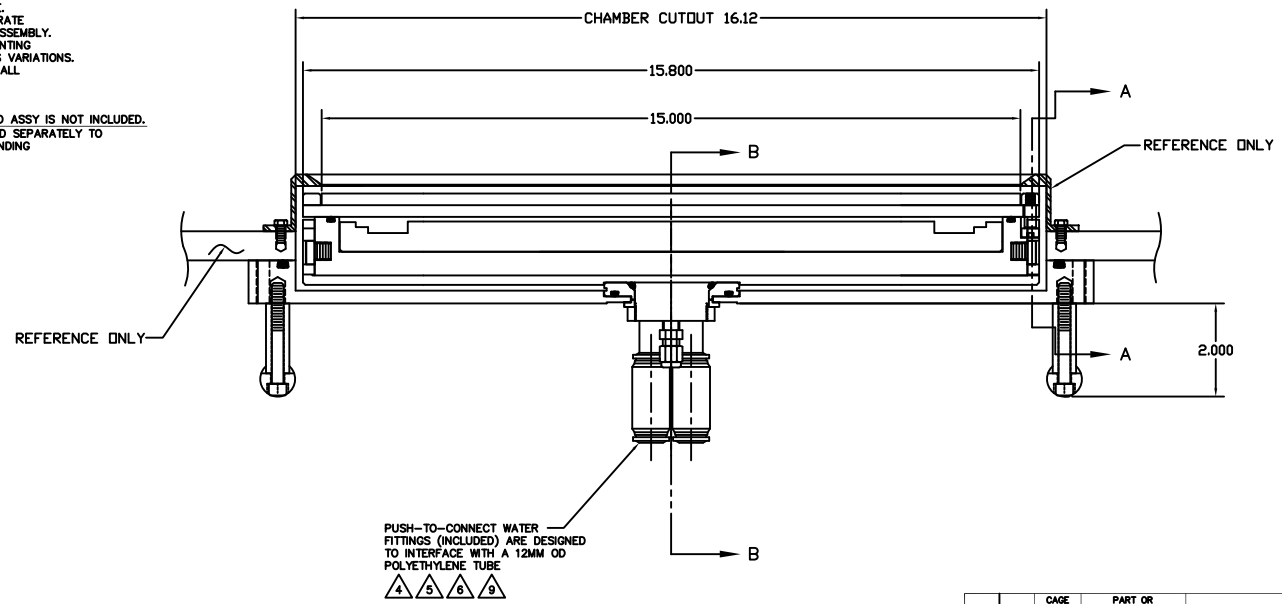

INSTALLATION CONTROL DRAWING

QUANTITY PER ASSEMBLY	CAGE CODE	PART OR IDENTIFYING NO.	NOMENCLATURE OR DESCRIPTION	MATERIAL SPECIFICATION	ZONE	ITEM NO
			PARTS LIST			

NEXT ASSEMBLY	USED ON
APPLICATION	

DRAWN JOHN MILLER 07/10/17

UNLESS OTHERWISE SPECIFIED DIMENSIONS ARE IN INCHES
TOLERANCE
.X ±.05
.XX ±.02
.XXX ±.010
ANGLES ±0.5°
SURFACE ROUGHNESS 125 RMS

FINISH

DO NOT SCALE DRAWING

THIS DRAWING CONTAINS PROPRIETARY INFORMATION AND MAY NOT BE REPRODUCED, DISTRIBUTED OR USED FOR THE BENEFIT OF ANYONE OTHER THAN MATERIALS SCIENCE, INC. IN CANADA, WITHOUT WRITTEN PERMISSION.

MATERIALS SCIENCE, INC.
Vacuum and Thin Film Technology
Albuquerque, New Mexico

SUNSOURCE, 5"X15" KAMLOK STYLE, MRC 600/900 RETROFIT

SIZE	CAGE CODE	DWG. NO.	REV
E		00000686	—

SCALE 1/1 WT: SHEET 1 OF 2

00000686

REVISION				
ZONE	REV	DESCRIPTION	DATE	APPROVED
		SEE SHEET 1		

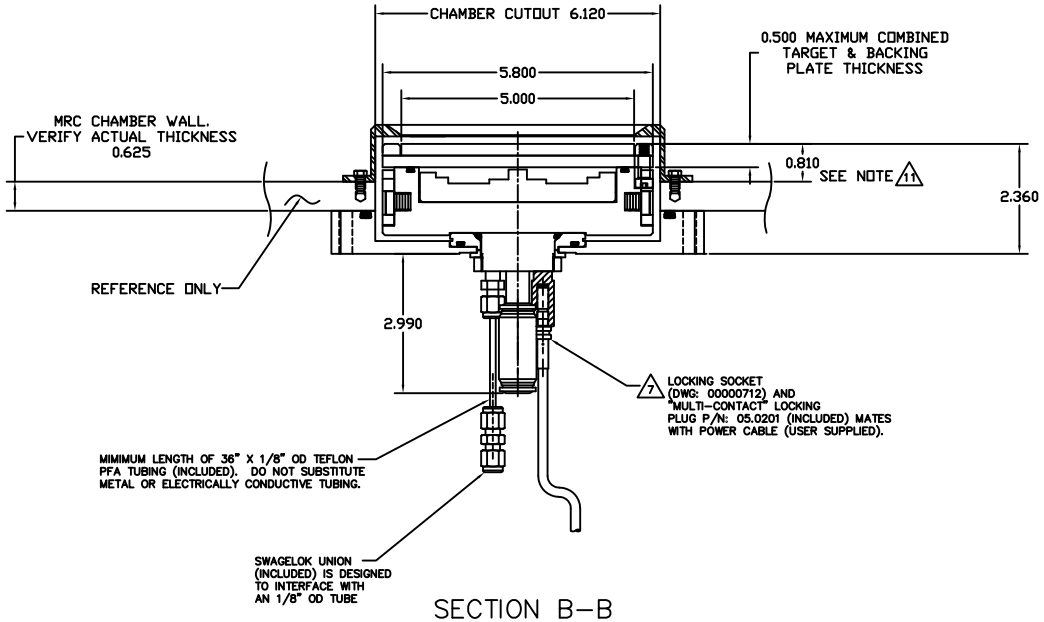

SECTION B–B

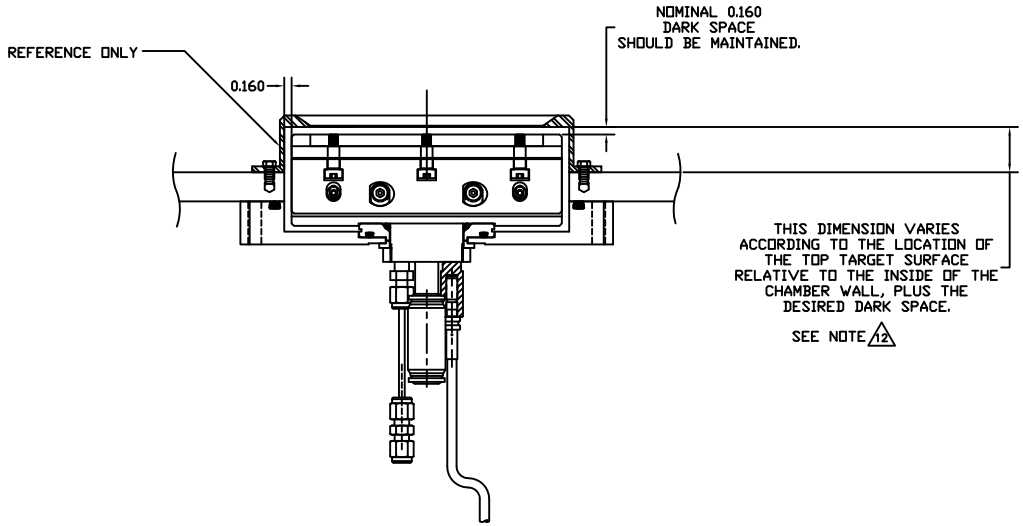

SECTION A–A

SIZE	CAGE CODE	DWG. NO.	REV
E		00000686	—
SCALE: 1/1		SHEET 2	

00000686