REVISION				
ZONE	REV	DESCRIPTION	DATE	APPROVED
		INITIAL RELEASE	200706	

NOTES: UNLESS OTHERWISE SPECIFIED

1. INTERPRET DRAWING IAW THE GLOBAL PROFESSIONAL PUBLICATIONS "DRAWING REQUIREMENTS MANUAL", EIGHTH EDITION.
2. INTERPRET DIMENSIONS AND TOLERANCES IAW ANSI Y14.5M – 1982.
3. INTERPRET ABBREVIATIONS IAW MIL–STD–12.
4. GAS FITTING (INCLUDED), SWAGELOK (ITEM 6) IS AVAILABLE FROM: HTTP://WWW.SWAGELOK.COM
5. MINIMUM 60" LONG POLYETHYLENE LINES REQUIRED FOR SAFE OPERATION. USER MUST SUPPLY ADDITIONAL 42" LONG POLYETHYLENE WATER LINES TO MEET THIS REQUIREMENT. DO NOT SUBSTITUTE METAL WATER FITTINGS FOR ITEM 8.
6. WATER LINE CONNECTORS (INCLUDED, ITEM 8) ARE AVAILABLE FROM: HTTP://WWW.JOHNGUEST.COM
7. MINIMUM 36" LONG TEFLON PFA LINE REQUIRED (36" INCLUDED WITH SOURCE) FOR SAFE OPERATION. DO NOT USE METAL GAS LINES TO MEET THIS REQUIREMENT – ELECTRICAL ISOLATION IS NECESSARY.
8. TAKE CARE NOT TO DING, SCRATCH OR GOUGE POLISHED SURFACE.
9. SEE MATERIALS SCIENCE, INC. DOCUMENT NO. 251011 FOR PROPER INSTALLATION, OPERATION AND USE OF POLARIS SPUTTERING SOURCES.
10. MASS OF SPUTTERING SOURCE ASSEMBLY FULLY ASSEMBLED IS 17 LBS., DRY.

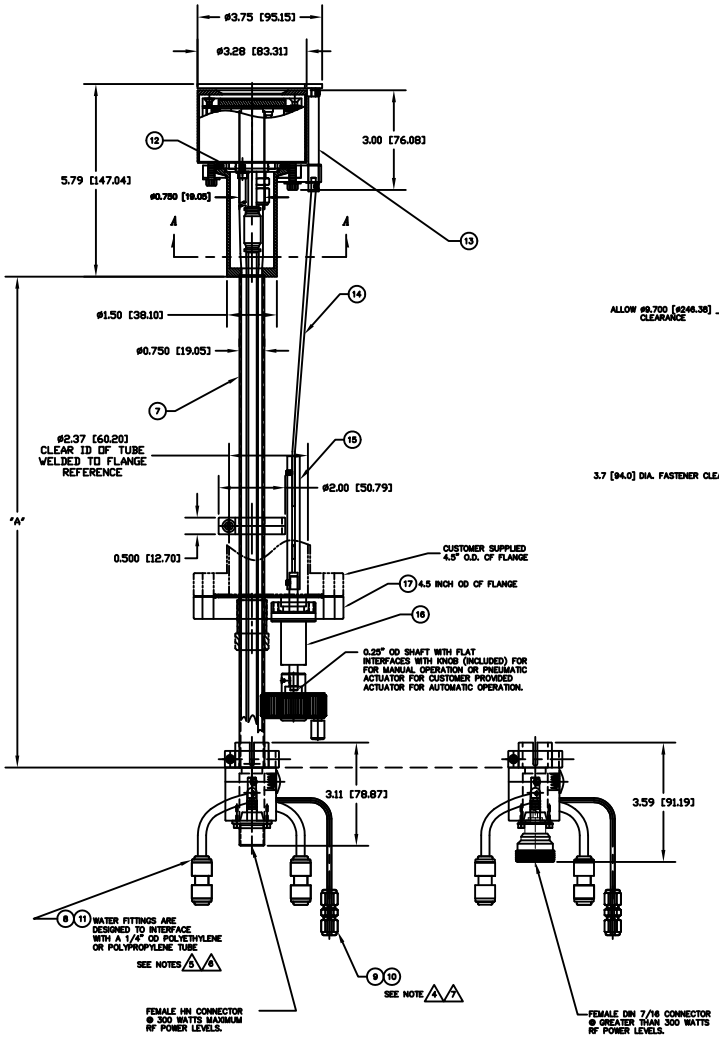

-1, -2, AND -3 ASSY SHOWN

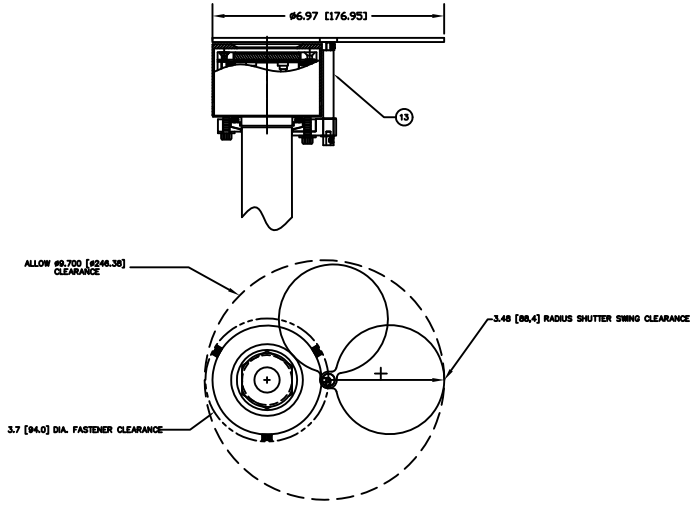

TOP VIEW

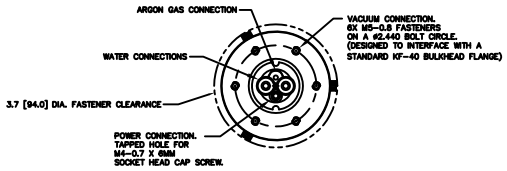

SECTION "A–A"

DASH NO	DIM "A"
–1	12" [304.8]
–2	18" [457.2]
–3	24" [609.6]

NOTE: SOURCE ASSEMBLY CANNOT BE INSERTED THROUGH CLEAR ID (2.37"/60.20MM) OF 4.5" CF/CF63 FLANGE. THE CF FLANGE MUST FIRST BE ATTACHED TO THE CHAMBER, THEN THE SOURCE FEEDTHROUGH SHAFT MUST BE INSTALLED THROUGH THE COMPRESSION FITTING FROM WITHIN THE CHAMBER. VERIFY THAT THIS IS POSSIBLE USING THE DIMENSIONS ON THIS DRAWING BEFORE PURCHASING THIS SOURCE.

–3	–2	–1	CAGE CODE	PART OR IDENTIFYING NO.	NOMENCLATURE OR DESCRIPTION	MATERIAL SPECIFICATION	ZONE	ITEM NO
								21
								20
								19
								18
1	1	1		00002604	WELDMENT, 4.5" CF TO 3/4" OD TUBE FEEDTHRU	304 CRES		17
1	1	1		00002382	FEEDTHROUGH, ROTARY, FERROFLUID SEAL			16
1	1	1		00002133	FEEDTHROUGH SHAFT CABLE CONNECTOR	304 CRES		15
1	1	1		00002134	FLEXIBLE CABLE ASSEMBLY	304 CRES		14
1	1	1		00002202	SHUTTER ASSEMBLY, 2 INCH POLARIS	304 CRES		13
3	3	3		00000100–3	CENTERING RING, KF–40			12
1	1	1	5	00000074–1	TUBING, 1/4" OD X .170" ID X 18"	POLYETHYLENE		11
1	1	1	7	00000038–1	TUBING, 1/8" OD X1/16" ID X 36" MINIMUM	TEFLON PFA		10
1	1	1	4	00000316	FITTING, SWAGELOK, SS–200–6	316 CRES		9
2	2	2		00000281–1	1/4 INCH OD COUPLING, QUICK CONNECT	P/N CI0408W		8
1	1	1		00000790	3/4 INCH TUBE FEEDTHROUGH ASSEMBLY	304 CRES		7
1				00000773–1	2 INCH INTERNAL CATHODE (CLAMPED TARGET)			6
	1			00000773–2	2 INCH INT CATHODE (DIRECT WATER COOLED TGT)			5
		1		00000773–3	2 INCH INTERNAL CATHODE (BONDED TARGET)			4
X	X			00004026–3	2" POLARIS SOURCE, VARIABLE, SHUTTER–4.5 CF			3
	X			00004026–2	2" POLARIS SOURCE, VARIABLE, SHUTTER–4.5 CF			2
		X		00004026–1	2" POLARIS SOURCE, VARIABLE, SHUTTER–4.5 CF			1

QUANTITY PER ASSEMBLY — PARTS LIST

NEXT ASSEMBLY	USED ON
APPLICATION	

DO NOT SCALE DRAWING

DRAWN J.MILLER 00/07/06

MATERIALS SCIENCE, INC.
Vacuum and Thin Film Technology
Albuquerque, New Mexico

THIS DRAWING CONTAINS PROPRIETARY INFORMATION AND MAY REPRODUCED, DISTRIBUTED OR USE OF THIS DRAWING OTHER THAN IN CONNECTION WITH MATERIALS SCIENCE, INC. IS EXPRESSLY PROHIBITED.

2" POLARIS, VARIABLE POSITION SHUTTER – 4.5" CF FLANGE

SIZE E | CAGE CODE | DWG. NO. 00004026 | REV —

SCALE 1/1 | WT. | SHEET 1 OF 2

00004026

INSTALLATION CONTROL DRAWING