REVISION				
ZONE	REV	DESCRIPTION	DATE	APPROVED
		INITIAL RELEASE	070919	

NOTES: UNLESS OTHERWISE SPECIFIED

1. INTERPRET DRAWING IAW THE GLOBAL PROFESSIONAL PUBLICATIONS "DRAWING REQUIREMENTS MANUAL", EIGHTH EDITION.
2. INTERPRET DIMENSIONS AND TOLERANCES IAW ANSI Y14.5M – 1982.
3. BREAK SHARP EDGES .002–015.
4. INTERPRET ABBREVIATIONS IAW MIL–STD–12.
5. LENGTH OF POWER CENTER CONDUCTOR CABLE ASSY (PART OF ITEM 7) IS FOR A STANDARD 1\2" BASEPLATE/CHAMBER WALL CONFIGURATION. PLEASE SPECIFY CHAMBER WALL THICKNESS WHEN ORDERING TO ENSURE PROPER CABLE LENGTH AT TIME OF ASSY.
6. GAS FITTING (INCLUDED), SWAGELOK (ITEM 6) IS AVAILABLE FROM: HTTP://WWW.SWAGELOK.COM
7. MINIMUM 60" LONG POLYETHYLENE LINES REQUIRED FOR SAFE OPERATION. USER MUST SUPPLY ADDITIONAL 42" LONG POLYETHYLENE WATER LINES TO MEET THIS REQUIREMENT. DO NOT SUBSTITUTE METAL WATER FITTINGS FOR ITEM 8.
8. WATER LINE CONNECTORS (INCLUDED, ITEM 8) ARE AVAILABLE FROM: HTTP://WWW.JOHNGUEST.COM
9. MINIMUM 36" LONG TEFLON PFA LINE REQUIRED (36" INCLUDED WITH SOURCE) FOR SAFE OPERATION. DO NOT USE METAI GAS LINES TO MEET THIS REQUIREMENT – ELECTRICAL ISOLATION IS NECESSARY.
10. INTERNAL POWER CONDUCTOR LENGTH FOR P/N 000000009 (PART OF ITEM 7 ASSEMBLY) = 3.740 INCHES LONG PLUS "A" DIMENSION OF ITEM 11.
11. WRAP TUBE WHERE CLAMP WILL BE LOCATED WITH TEFLON TAPE PRIOR TO TIGHTENING COMPRESSION CLAMP. TAKE CARE NOT TO DING, SCRATCH OR GOUGE POLISHED SURFACE.
12. SEE MATERIALS SCIENCE, INC. DOCUMENT NO. 251011 FOR PROPER INSTALLATION, OPERATION AND USE OF POLARIS SPUTTERING SOURCES.
13. MASS OF SPUTTERING SOURCE FULLY ASSEMBLED IS 5.8 LBS., DRY.

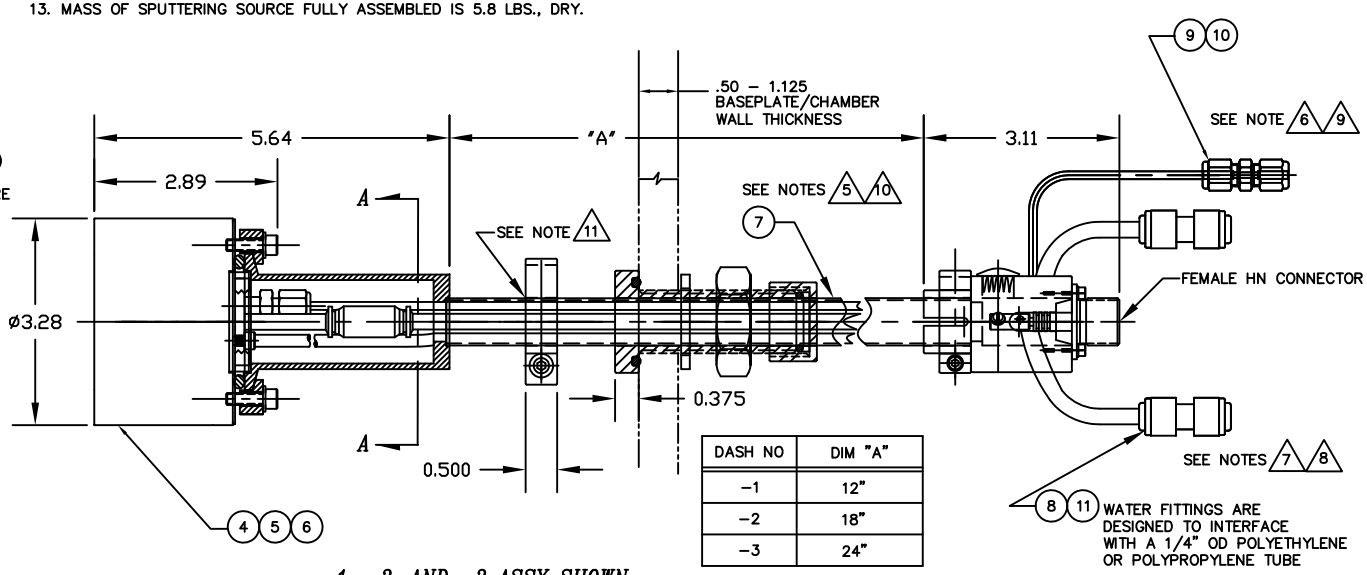

DASH NO	DIM "A"
–1	12"
–2	18"
–3	24"

–1, –2, AND –3 ASSY SHOWN

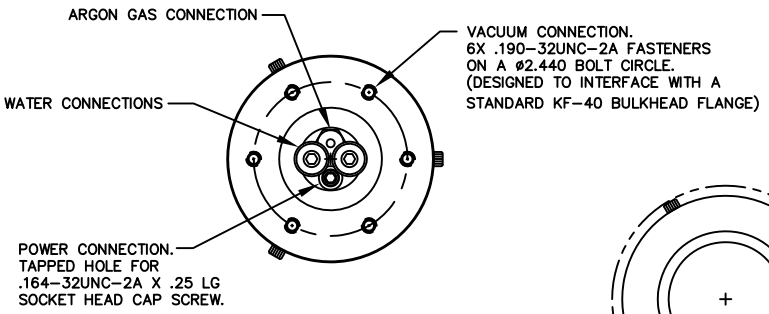

SECTION "A–A"

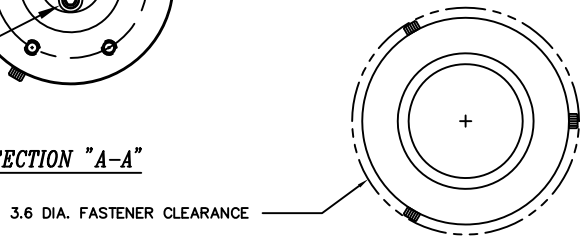

TOP VIEW

–3	–2	–1	CAGE CODE	PART OR IDENTIFYING NO.	NOMENCLATURE OR DESCRIPTION	MATERIAL SPECIFICATION	ZONE	ITEM NO
1	1	1	7	00000074–1	TUBING, 1/4" OD X .170" ID X 18"	POLYETHYLENE		11
1	1	1	9	00000038–1	TUBING, 1/8" OD X1/16" ID X 36" MINIMUM	TEFLON PFA		10
1	1	1	6	00000316	FITTING, SWAGELOK, SS–200–6	316 CRES		9
2	2	2		00000281–1	1/4 INCH OD COUPLING, QUICK CONNECT	P/N CI0408W		8
1	1	1	5	00000789	3/4 INCH TUBE FEEDTHROUGH ASSEMBLY	304 CRES		7
1				00000778–3	2 INCH INTERNAL CATHODE (CLAMPED TARGET)			6
	1			00000778–2	2 INCH INT CATHODE (DIRECT WATER COOLED TGT)			5
		1		00000778–1	2 INCH INTERNAL CATHODE (BONDED TARGET)			4
X				00000785–3	2" POLARIS SOURCE, 3/4" OD TUBE FEEDTHRU ASSY			3
	X			00000785–2	2" POLARIS SOURCE, 3/4" OD TUBE FEEDTHRU ASSY			2
		X		00000785–1	2" POLARIS SOURCE, 3/4" OD TUBE FEEDTHRU ASSY			1

QUANTITY PER ASSEMBLY

PARTS LIST

NEXT ASSEMBLY	USED ON
APPLICATION	

UNLESS OTHERWISE SPECIFIED DIMENSIONS ARE IN INCHES TOLERANCES ARE: DECIMALS .X ±.030 .XX ±.010 .XXX ±.005 ANGLES ±0°30'
MACHINE SURFACES UNLESS OTHERWISE SPECIFIED 125
FINISH
DO NOT SCALE DRAWING

DRAWN J. MILLER 07/09/19
APPROVAL – –

THIS DRAWING CONTAINS PROPRIETARY INFORMATION AND ANY REPRODUCTION, DISCLOSURE OR USE OF THIS DRAWING WITHOUT WRITTEN PERMISSION FROM MATERIALS SCIENCE, INC IS EXPRESSLY PROHIBITED.

MATERIALS SCIENCE, INC.
Vacuum and Thin Film Technology
www.materials-inc.com

INSTALLATION CONTROL DRAWING

2 INCH POLARIS, 3/4" OD TUBE RF/DC FEEDTHROUGH ASSY

SIZE D | CAGE CODE | DWG. NO. 00000785 | REV –
SCALE: 1/1 | WT: | DISP: | SHEET: 1 OF 1

DWG NO. 00000785 REV –