REVISION				
ZONE	REV	DESCRIPTION	DATE	APPROVED
		INITIAL RELEASE	080822	J. MILLER

NOTES: UNLESS OTHERWISE SPECIFIED

1. INTERPRET DRAWING IAW THE GLOBAL PROFESSIONAL PUBLICATIONS "DRAWING REQUIREMENTS MANUAL", EIGHTH EDITION.
2. INTERPRET DIMENSIONS AND TOLERANCES IAW ANSI Y14.5M – 1982.
3. INTERPRET ABBREVIATIONS IAW MIL-STD-12.

4. WARNING:
WATER FITTINGS HAVE A CLEAR ID OF .25 INCHES. USING A SLEEVE OR SIMILAR DEVICE INSIDE THE WATER HOSE MAY CAUSE FLUID RESTRICTIONS AND INTERFERENCE WITH THE NORMAL OPERATION OF THE CATHODE AND THEREFORE IS NOT RECOMMENDED.

5. WATER CHANNELS ARE SYMMETRICAL THROUGHOUT, ORIENTATION OF WATER INLET OR OUTLET IS NOT CRITICAL.

6. WARNING:
MINIMUM HOSE LENGTH OF 60" IS REQUIRED TO ENSURE RESISTIVITY RELATIVE TO ELECTRICAL GROUND WITHIN 50 KILO OHMS. TEST CABLE WITH AN OHM METER OR OTHER SUITABLE DEVICE BEFORE USE. DO NOT USE METAL TUBING! POLYETHYLENE RECOMMENDED.

7. SWAGELOCK UNION FITTING, 1/8" OD TUBE IS SUPPLIED WITH SOURCE AND ALSO AVAILABLE FROM SWAGELOK COMPANY
HTTP://WWW.SWAGELOK.COM
OR
SAN DIEGO FLUID SYSTEM TECHNOLOGIES
6350 NANCY RIDGE DRIVE, SUITE 101
SAN DIEGO, CA 92121
(858) 320-4000
SWAGELOK P/N SS-200-6

SWAGELOCK FITTING, 1/8" OD TUBE IS WELDED TO UTILTY CONNECTION MODULE.

8. TUBING, TEFLON, PFA (36" SUPPIED WITH SOURCE) IS AVAILABLE FROM:
MC MASTER CARR
9630 NORWALK BLVD
SANTA FE SPRINGS, CA 90670-2932
VOICE: (310) 692-5911
FAX: (310) 695-2323
MCMASTER-CARR P/N 5180K51
DO NOT USE METAL GAS LINES TO MEE THIS REQUIREMENT – ELECTRICAL ISOLATION IS NECESSARY.

9. WATER LINE TUBE UNION, IS AVAILABLE FROM:
ALPHA TECHNOLOGIES
320 PREMIER COURT, SUITE 222
FRANKLIN, TN 37067
TEL: (615) 771-6650
APHA PART NUMBER 88040-06

10. SEE MATERIALS SCIENCE, INC. DOCUMENT NO. 251092 FOR PROPER INSTALLATION, OPERATION AND USE OF SUNSOURCE SPUTTERING SOURCES.

11. MATERIALS SCIENCE P/N 00000680 SPANNER WRENCH REQUIRED TO TIGHTEN NUT.
FEDERAL SPEC GGG-W-665b.
ADJUSTABLE UP TO 2".
OVERALL LENGTH: 6 3/8"
PIN DIAMETER: 3/16"
PIN HEIGHT: 1/8"

12. MULTI-CONTACT-USA:
5560 SKYLANE BLVD.
SANTA ROSA, CA 95403
VOICE: (707) 575-7575
FAX: (707) 575-7373
INTERNET:
HTTP://WWW.MULTI-CONTACT-USA.COM
P/N 05.0201 LOCKING PLUG IS SUPPLIED WITH SOURCE.

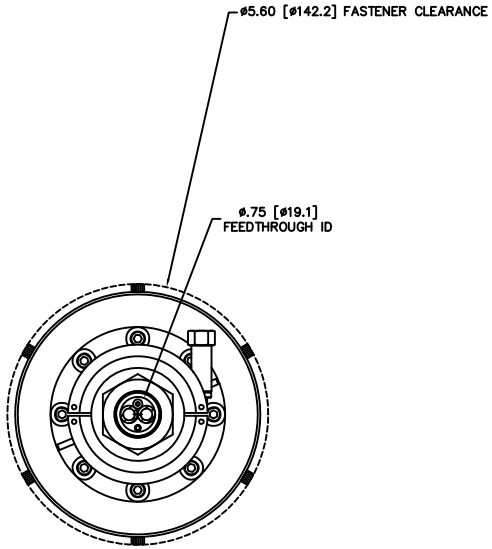

SECTION A–A

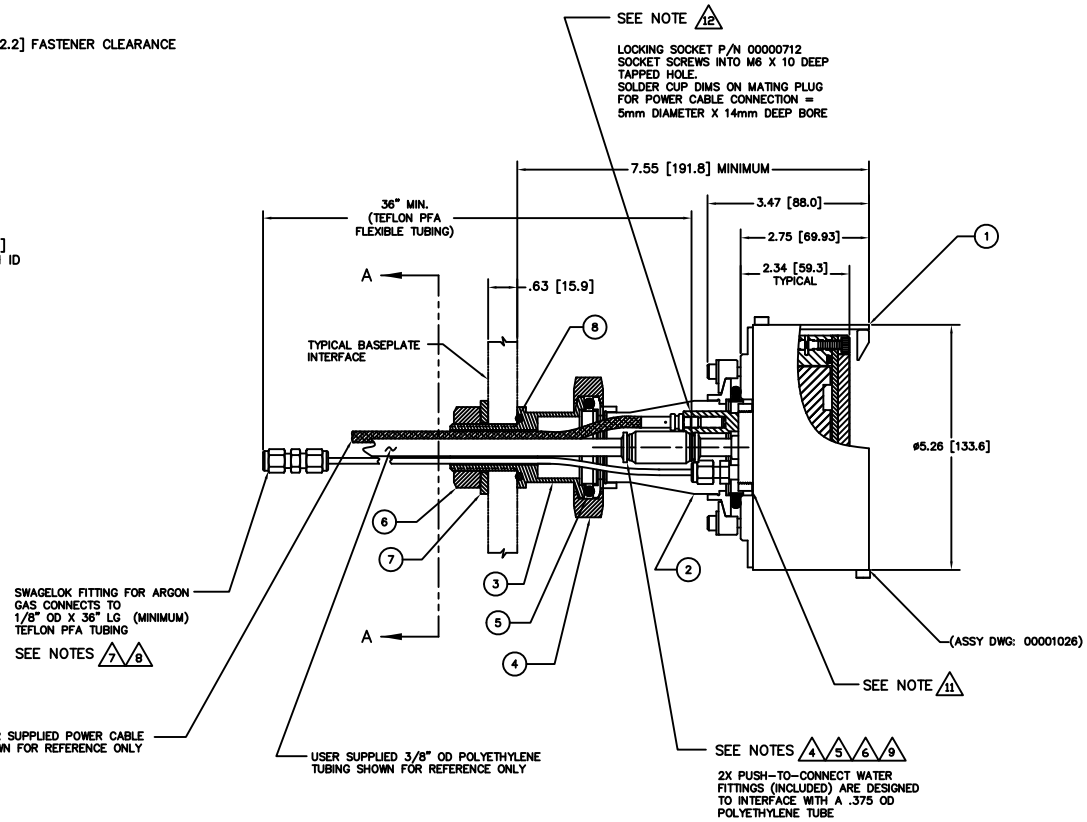

INSTALLATION CONTROL DRAWING

QUANTITY PER ASSEMBLY		CAGE CODE	PART OR IDENTIFYING NO.	NOMENCLATURE OR DESCRIPTION	MATERIAL SPECIFICATION	ZONE	ITEM NO
	1		00000153-2216	O-RING 75 DUROMETER 2-216	VITON		8
	1		00000032	FLT WASHER, 1.06 ID X 2.0 OD	18-8 CRES		7
	1		00000033	JAM NUT, HEX 1.00-14UNS	18-8 CRES		6
			00000100-3	CENTERING RING, KF-40, VITON O-RING	18-8 CRES		5
	1		00000099-1	KF-40 STAINLESS STEEL CLAMP	18-8 CRES		4
	1		00000007	1" BASEPLATE TO KF-40 BASEPLATE FEEDTHRU	18-8 CRES		3
	1		00001028	KF-50 TO KF-40 CONICAL ADAPTOR	18-8 CRES		2
			00001026	4 INCH INTERNAL BASIC SPUTTERING SOURCE			1

PARTS LIST

NEXT ASSEMBLY	USED ON
APPLICATION	

DO NOT SCALE DRAWING

DRAWN J. MILLER 08/08/22

MATERIALS SCIENCE, INC.
Vacuum and Thin Film Technology
Albuquerque, New Mexico

SUNSOURCE, 4 INCH INTERNAL ASSY-1" BASEPLATE FEEDTHRU

SIZE E | CAGE CODE | DWG. NO. 00001029 | REV –

SCALE 1/1 | WT. | SHEET 1 OF 1

00001029