REVISION				
ZONE	REV	DESCRIPTION	DATE	APPROVED
	–	INITIAL RELEASE	100515	–

NOTES: UNLESS OTHERWISE SPECIFIED

1. INTERPRET DRAWING IAW THE GLOBAL PROFESSIONAL PUBLICATIONS "DRAWING REQUIREMENTS MANUAL", EIGHTH EDITION.
2. INTERPRET DIMENSIONS AND TOLERANCES IAW ANSI Y14.5M – 1982.
3. INTERPRET ABBREVIATIONS IAW MIL-STD-12.
4. WARNING: WATER FITTINGS HAVE A CLEAR ID OF .500". USING A SLEEVE OR SIMILAR DEVICE INSIDE THE WATER HOSE MAY CAUSE FLUID RESTRICTIONS AND INTERFERENCE WITH THE NORMAL OPERATION OF THE CATHODE AND THEREFORE IS NOT RECOMMENDED.
5. WATER CHANNELS ARE SYMMETRICAL THROUGHOUT, ORIENTATION OF WATER INLET OR OUTLET IS NOT CRITICAL.
6. WARNING: MINIMUM HOSE LENGTH OF 60" [1524 MM] IS REQUIRED TO ENSURE RESISTIVITY RELATIVE TO ELECTRICAL GROUND WITHIN 50 KILO OHMS. TEST CABLE WITH AN OHM METER OR OTHER SUITABLE DEVICE BEFORE USE.
7. MULTI-CONTACT-USA: 5560 SKYLANE BLVD. SANTA ROSA, CA 95403 VOICE: (707) 575-7575 FAX: (707) 575-7373 INTERNET: www.multi-contact-usa.com
8. FOR PROPER INSTALLATION, OPERATION, AND USE OF THE SUNSOURCE PLANAR MAGNETRON CATHODE(S), SEE MATERIALS SCIENCE, INC. DOCUMENT NUMBER 251091.
9. P/N A100-12-10 IS AVAILABLE FROM: LENZ, INC. P.O. BOX 1044 DAYTON, OH 45401-1044 TEL: (937) 277-6516 HTTP://WWW.LENZINC.COM
10. ALL FASTENERS ARE METRIC.
11. DIMENSIONS IN BRACKETS "[]" DENOTE REFERENCE DIMENSIONS IN MILLIMETERS.
12. TARGET UTILIZATION IS HIGHEST FOR BONDED & CLAMPED TARGETS. DIRECTLY WATER COOLED TARGETS MUST BE SLIGHTLY LONGER & WIDER – THIS EXTRA AREA IS NOT SPUTTERED. THEREFORE TARGET UTILIZATION IS LOWER – BY DEFINITION.
13. ADD .100 [2.54] WHEN CLAMPED TARGETS ARE USED. A TALLER SET OF SIDE ANODE/GROUND SHIELDS ARE REQUIRED TO MAINTAIN THE PROPER DARK SPACE GAP WHEN CLAMPED TARGETS ARE USED. BONDED AND DIRECTLY WATER COOLED TARGETS USE THE STANDARD SIDE SHIELDS SHOWN AND DIMENSIONED.

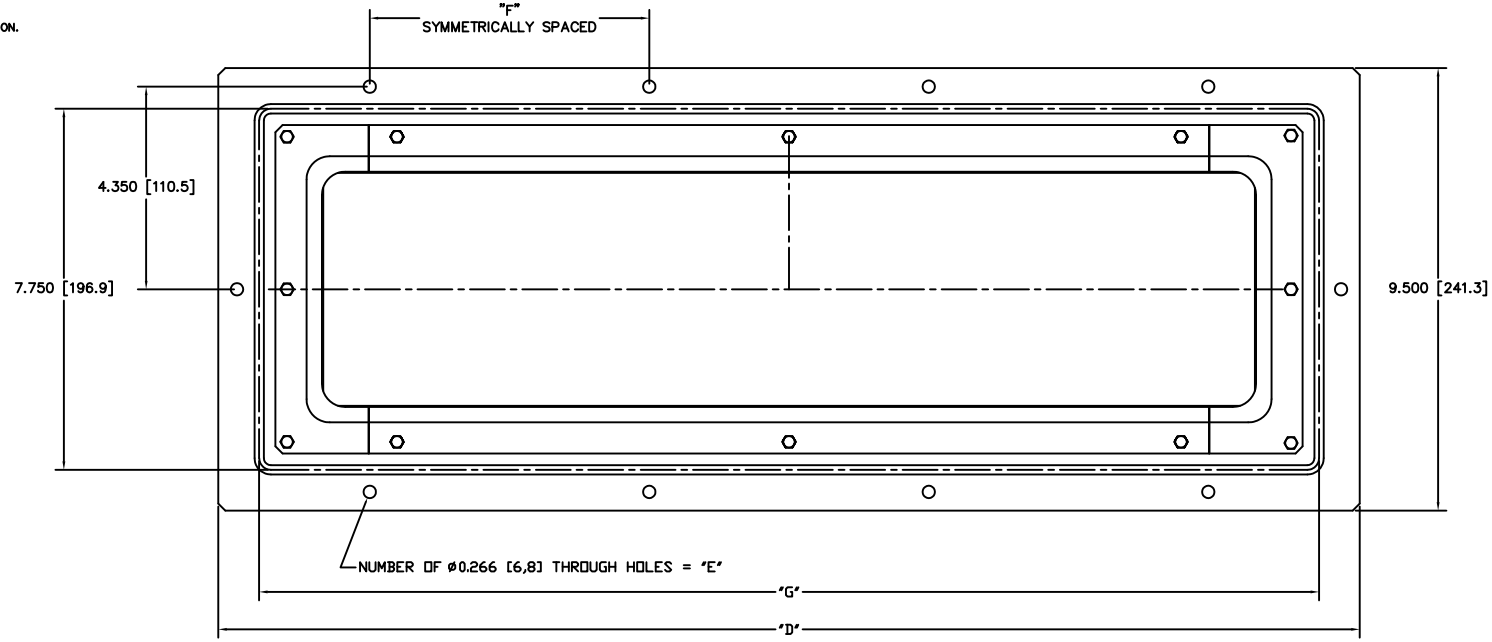

VACUUM SIDE

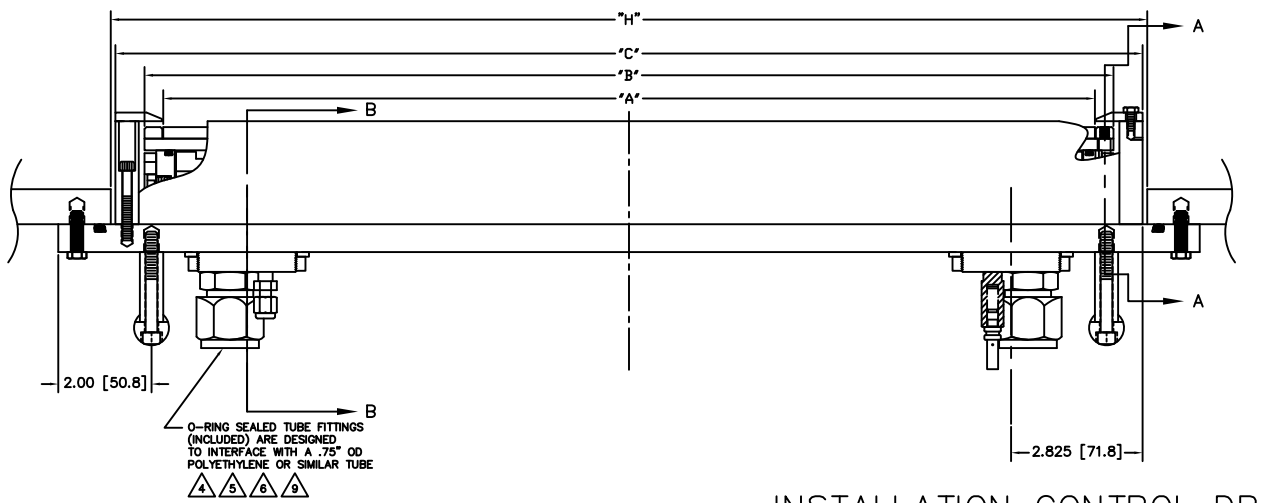

TARGET LENGTH	"A" DIMENSION	"B" DIMENSION	"C" DIMENSION	"D" DIMENSION
8 [203,2]	8.000 [203,2]	8.80 [223,5]	10.05 [255,3]	12.50 [317,5]
10 [254,0]	10.000 [254,0]	10.80 [274,3]	12.05 [306,1]	14.50 [368,3]
12 [304,8]	12.000 [304,8]	12.80 [325,1]	14.05 [356,9]	16.50 [419,1]
15 [381,0]	15.000 [381,0]	15.80 [401,3]	17.05 [433,1]	19.50 [495,3]
20 [508,0]	20.000 [508,0]	20.80 [528,3]	22.05 [560,1]	24.50 [622,3]

TARGET LENGTH	"E" DIMENSION	"F" DIMENSION	"G" DIMENSION	"H" DIMENSION
8 [203,2]	6 EACH	3.500 [88,9]	10.75 [273,1]	"C" + .20 [5,1]
10 [254,0]	6 EACH	3.500 [88,9]	12.75 [323,9]	"C" + .20 [5,1]
12 [304,8]	8 EACH	6.000 [152,4]	14.75 [374,7]	"C" + .20 [5,1]
15 [381,0]	8 EACH	6.000 [152,4]	17.75 [450,9]	"C" + .20 [5,1]
20 [508,0]	10 EACH	6.000 [152,4]	22.75 [577,9]	"C" + .20 [5,1]

NOTES:

A. TARGET DIMENSIONS NOTED IN TABLE ARE FOR COMMON SIZES.
B. OTHER TARGET LENGTHS CAN BE ACCOMODATED.
C. LINEAR DIMENSIONS IN TABLE SCALE EXACTLY.
D. "G" DIMENSION = 2.75 PLUS TARGET LENGTH

INSTALLATION CONTROL DRAWING

QUANTITY PER ASSEMBLY	CAGE CODE	PART OR IDENTIFYING NO.	NOMENCLATURE OR DESCRIPTION	MATERIAL SPECIFICATION	ZONE	ITEM NO
			PARTS LIST			

DRAWN J. MILLER 10/06/16

MATERIALS SCIENCE, INC. Vacuum and Thin Film Technology

SUNSOURCE, 5" WIDE FLANGE MOUNT, SHORT, HIGH POWER

UNLESS OTHERWISE SPECIFIED DIMENSIONS ARE IN INCHES TOLERANCES ARE: FRACTIONS ±1/64 .X ±.1 .XX ±.03 .XXX ±.010 ANGLES DEGREES

THIS DRAWING CONTAINS PROPRIETARY INFORMATION AND ANY REPRODUCTION, DISTRIBUTION OR USE OF THIS DRAWING WITHOUT WRITTEN PERMISSION OF MATERIALS SCIENCE, INC. IS EXPRESSLY PROHIBITED.

FINISH

DO NOT SCALE DRAWING

NEXT ASSEMBLY	USED ON
APPLICATION	

SIZE E | CAGE CODE | DWG. NO. 00002108 | REV –

SCALE 1/1 | WT. | DATE | SHEET 1 OF 2

00002108

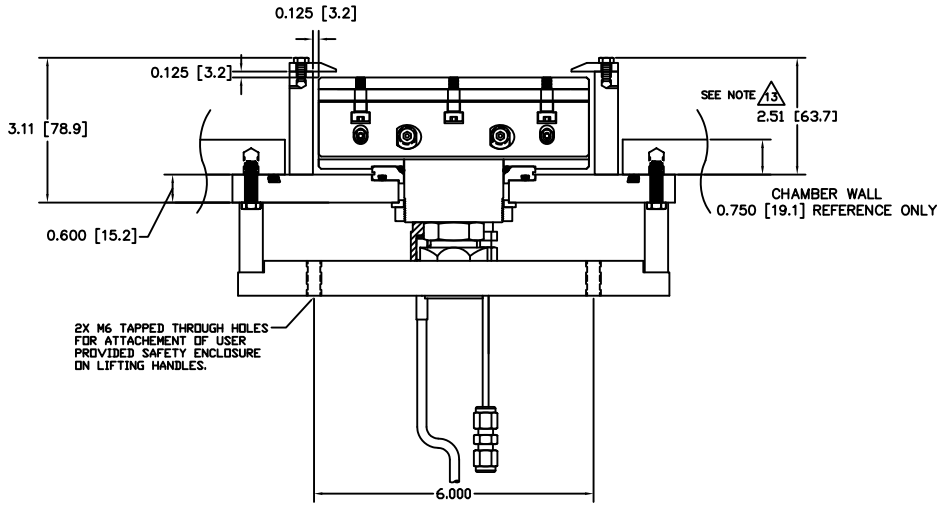

BONDED TARGET ASSEMBLY SHOWN

SECTION A–A

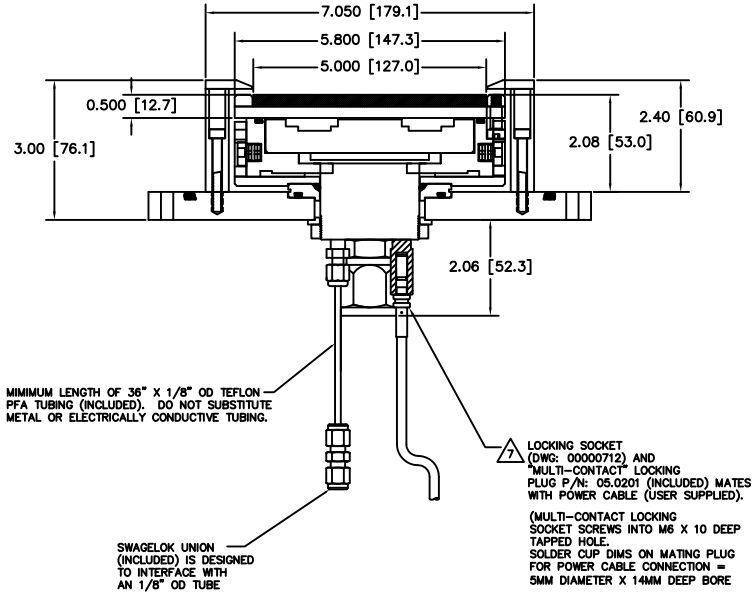

BONDED TARGET ASSEMBLY SHOWN

SECTION B–B

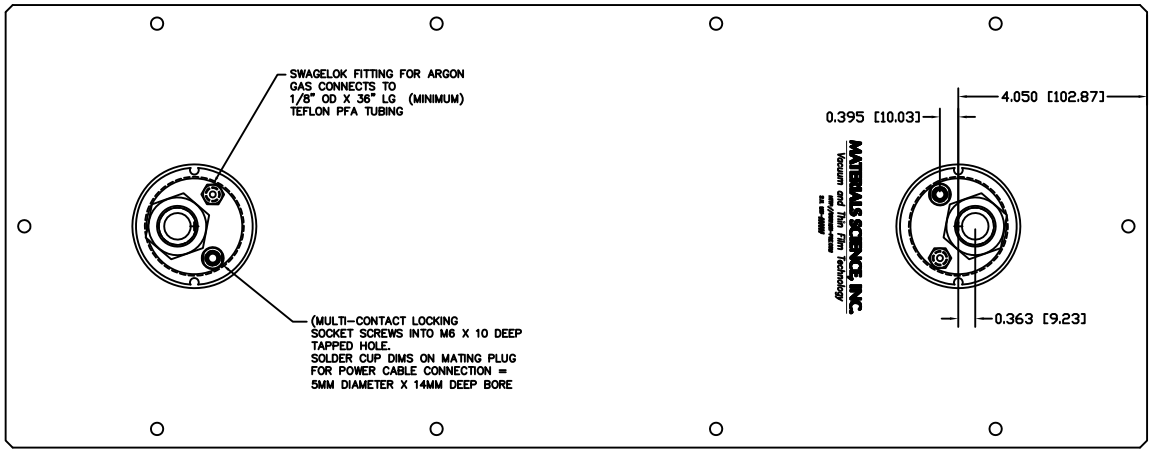

ATMOSPHERE SIDE

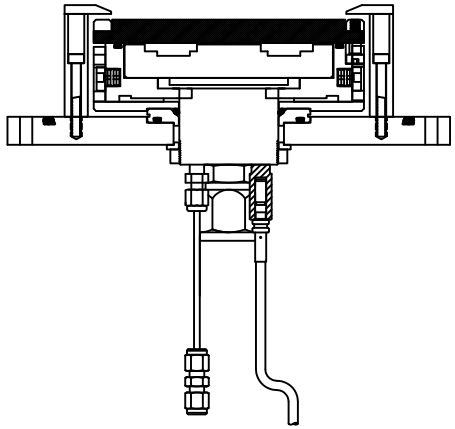

DIRECT WATER COOLED TARGET SHOWN

00002108

E 00002108 — 1/1 2